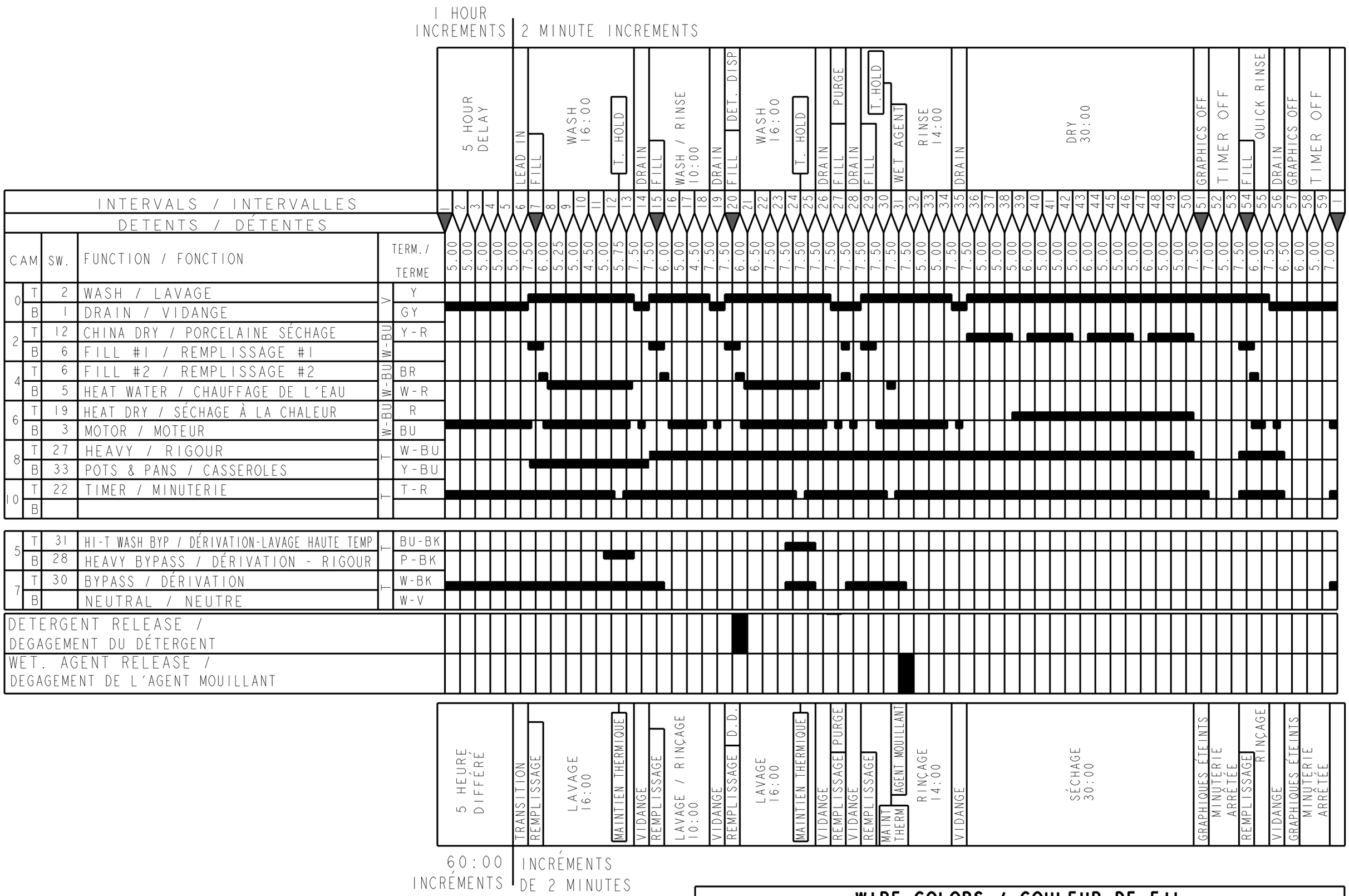

WIRE COLORS / COULEUR DE FIL					
W	WHITE	BLANC	BK	BLACK	NOIR
BU	BLUE	BLEU	T	TAN	TAN
LBU	LIGHT BLUE	BLEU PÂLE	O, OR	ORANGE	ORANGE
BR	BROWN	MARRON	P	PINK	ROSE
GY	GRAY	GRIS	R	RED	ROUGE
Y	YELLOW	JAUNE	V	VIOLET	VIOLET

SCHEMATIC SHOWN WITH DOOR SWITCH CLOSED, ALL TIMER CONTACTS OPEN.
SCHÉMAS ILLUSTRÉS AVEC INTERRUPTEUR DE PORTE FERMÉ, TOUS CONTACTS DE MINUTERIE OUVERTS.

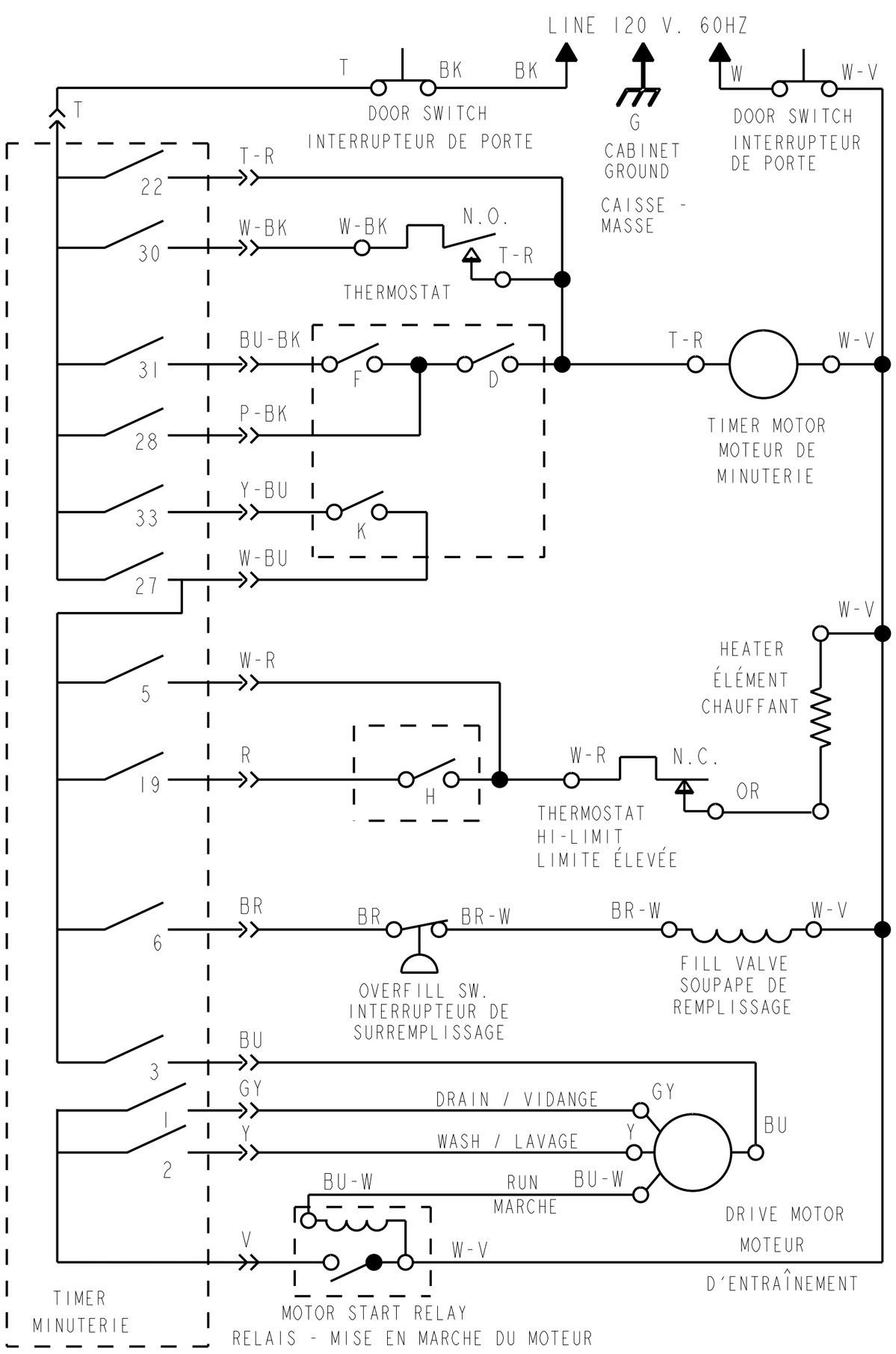

MANUFACTURED UNDER ONE OR MORE OF THE FOLLOWING UNITED STATES PATENTS:

4,319,598 4,319,599 4,350,306 4,418,868 4,449,765
4,559,959 4,693,526 4,732,323 4,732,431 4,746,177
4,753,570 4,758,057 4,765,697 4,776,620 4,802,934
4,805,647 4,822,241 4,834,125 4,848,382 4,927,033
4,991,611 5,005,740 5,018,550 5,031,649 5,031,651
5,033,659 5,039,828 5,069,360 5,158,346 5,165,433
5,165,435 5,202,582 5,330,102 5,474,378 5,637,938
5,881,906 5,882,739 5,900,070 6,045,203 6,045,205
DES314,256 DES320,489 DES391,696 DES393,333

OTHER PATENTS PENDING

MANUFACTURED UNDER ONE OR MORE OF THE FOLLOWING CANADIAN PATENTS:
FABRIQUÉ SOUS UN OU PLUSIEURS DES BREVETS CANADIENS SUIVANTS:

1,278,461 1,288,666 1,288,667 1,288,688 2,001,663
2,017,386 2,022,831 2,033,506 2,049,828 2,053,752
2,058,213 2,075,251 2,115,475 DES67168

OTHER PATENTS PENDING
AUTRES BREVETS EN INSTANCE

PART NO.
PIÉCE N° 8275138

DISHWASHER WIRING DIAGRAM

SCHÉMA DE CABLAGE DU LAVE - VAISSELLE

PUSH BUTTON / BOUTON POUSSOIR		K	D	F	H
1	"NORMAL"	X	X		
2	"HEAVY"	O	X		
3	"POTS & PANS"	X	O		
4					
5					
6	"HI-TEMP WASH"			O	
7	"AIR DRY"				O
8	"RESET" OPTIONS			X	X
6&7	BOTH / DEUX OPTIONS			O	O

CLOSED / FERMÉ X
OPEN / OUVERT O